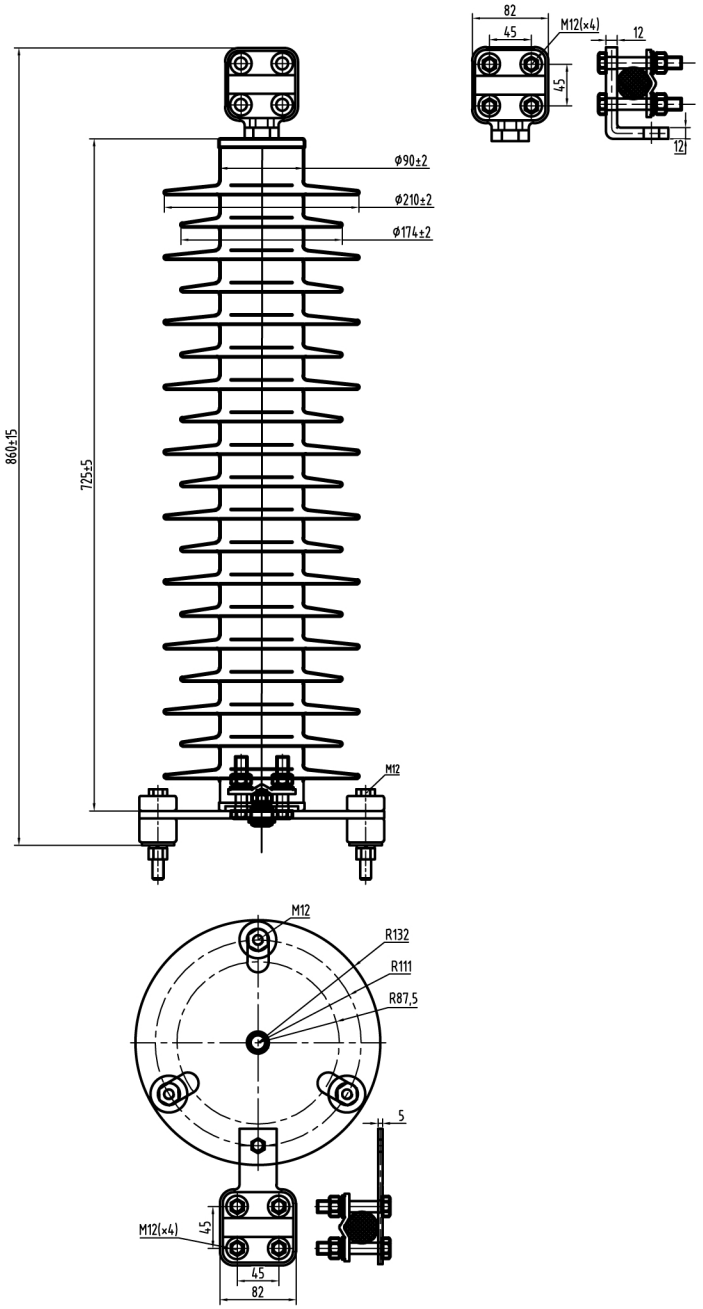

Surge arrester performance data

No	Item	Data	Unit
1	Rated voltage	60	kV
2	Continuous operating voltage	48.00	kV
3	Nominal discharge current	10	kA
4	8/20μS residual voltage of lightning impulse current	≤180	kV
5	Class	3.0	
7	High current impulse of 4/10μS	100	kA
8	Creepage distance	2329	mm

ERKAN ELEKTROMEKANİK MALZEMELER ELEKTRİK MÜHENDİSLİK İHR.SAN ve A.Ş.
Osbm/ 100.yıl/Bulvarı Kosova İş Merk.No:137/K
Tel:0312 309 26 88 pbx Fax:0312 311 37 90
Vkus V.D. 361 029 3397 Yenimahalle/ANKARA

POLiPAR®
THE POWER OF FUTURE

UNIT: MM

01

YH10W series