T21031804R1

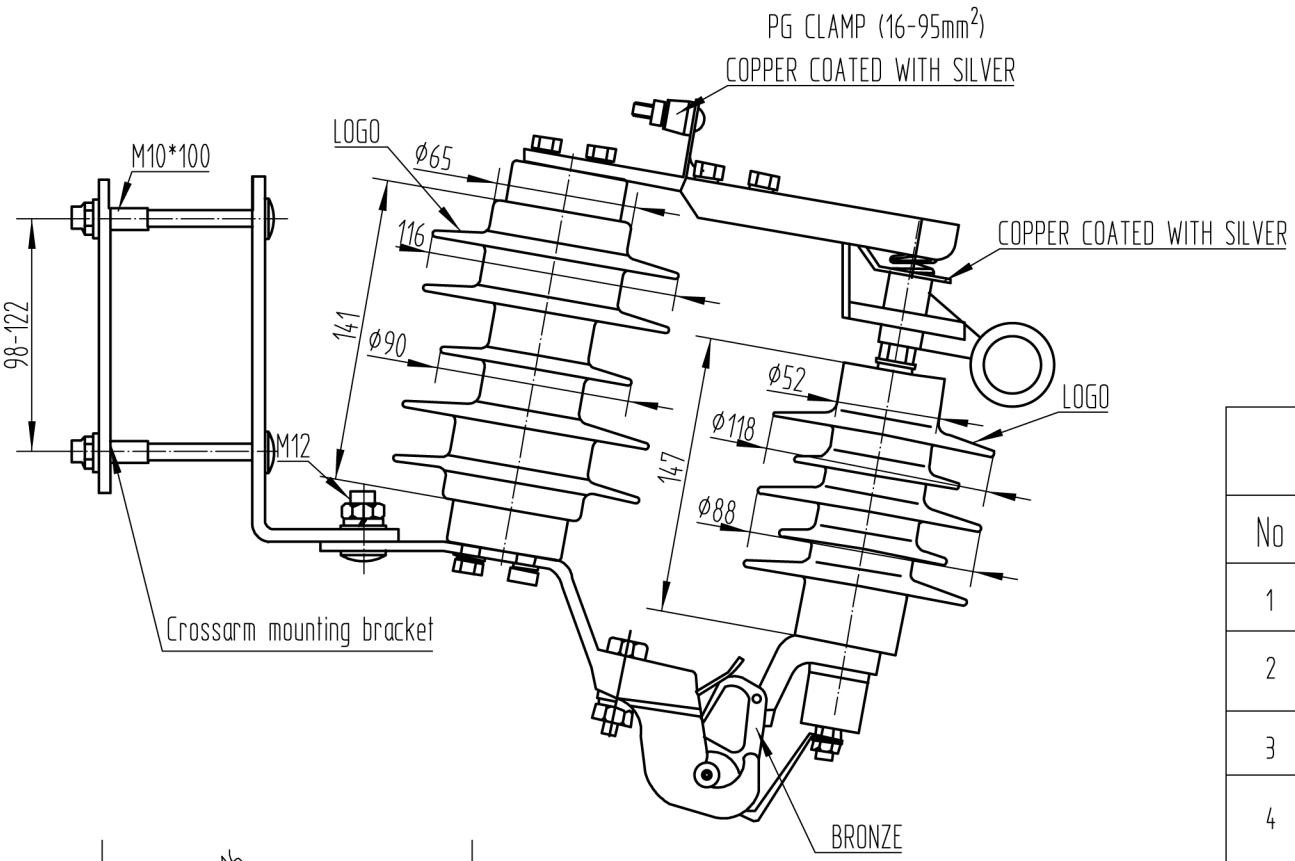

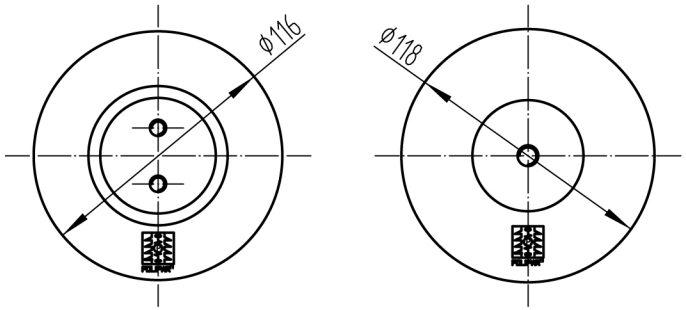

Surge arrest performance data				
No	Item	Data	Unit	Noted
1	Rated voltage	12	kV	
2	Continuous operating voltage	9.6	kV	
3	Nominal discharge current	10	kA	
4	8/20μS residual voltage of lightning impulse of 2mS	≤36	kV	
5	Long-duration current impulse of 2mS	400	A	
6	High current impulse of 4/10μS	100	kA	
7	Creepage distance	375	mm	

Item	Description	Remark	Quantity	Material	Weight	Code

YH10W series

POLiPAR®
THE POWER OF FUTURE

Date:19/06-2021 | Type:YH10W-12 | Drawing:T21031804R1