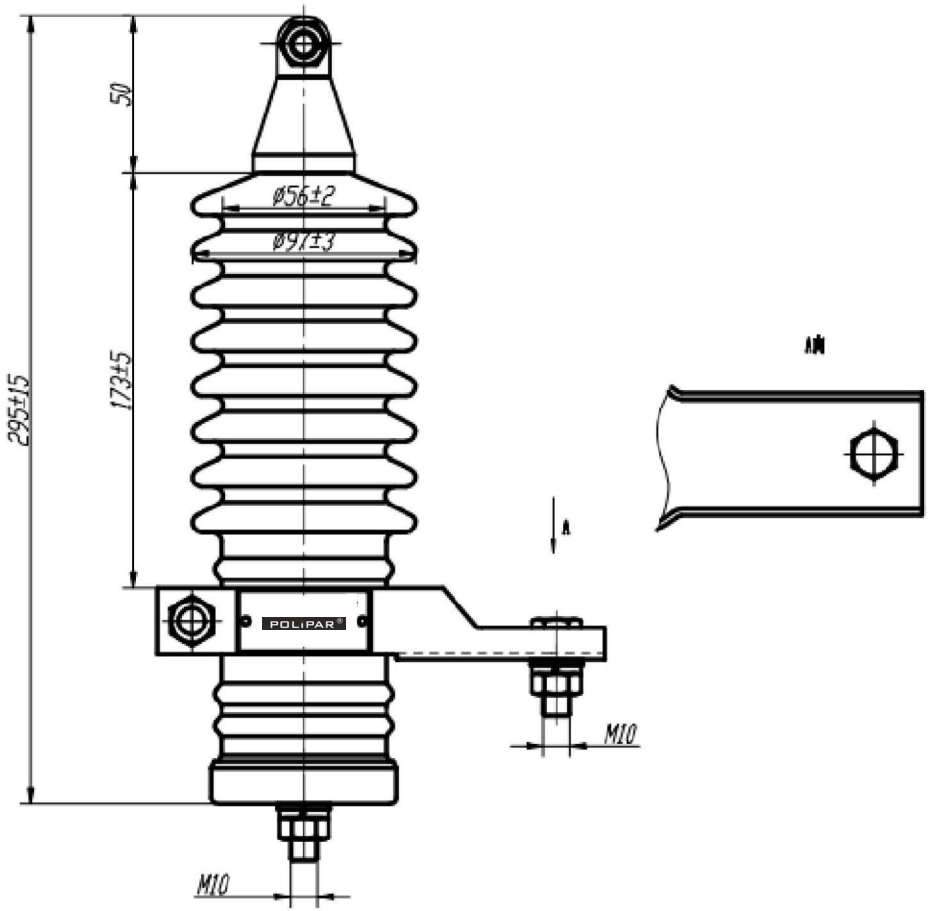

Surge arrester performance data				
No	Item	Data	Unit	Noted
1	Rated voltage	10.5	kV	
2	Continuous operating voltage	8.4	kV	
3	Nominal discharge current	5	kA	
4	8/20μS residual voltage of lightning impulse current	≤35	kV	
5	Long-duration current impulse of 2mS	150	A	
6	High current impulse of 4/10μS	65	kA	
7	Creepage distance	360	mm	

5KA 11KV
Surge arrester

POLiPAR®
THE POWER OF FUTURE

1:5

01